- Information

Prod.

Optical Fiber and Power Cable Feeder Clamp

Prod No.

FC-CL-DCFO-M1

Application and Properties:

Feeder clamp is widely used in site installation to fix optical fiber and coaxial feeder cables to base towers. The Clamps are manufactured of UV resistant material. The design offers least stress and maximum grip to manage the cable system.

- Other Details

In Technical Specification Tab.

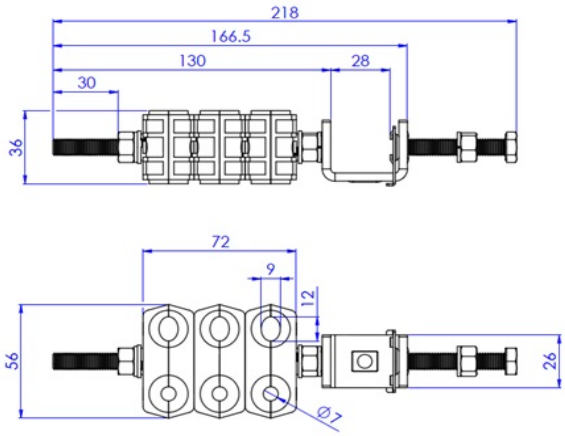

- Technical Specification